BLEND

2022 ANTHONY GUERRÉE



DESIGN INSPIRATION

The strong sense of connection between LINTELOO and designer Anthony Guerrée stems from a shared love for the combination of functionality, design and artisanship. The BLEND dining sofa reflects this: highly practical, extremely pleasing on the eye, and amazingly well-made. But ultimately, it is about your way of life. Which is why the BLEND dining sofa is modular – this leaves room for individuality, where you create your own perfect set-up.

LINTELOO



BLEND

DESIGNED BY ANTHONY GUERRÉE

Anthony Guerrée was educated at the École Boulle in Paris, where—since its foundation in 1886—young talents are schooled in the fine and applied arts, and where craftmanship plays a central role. Fascinated by the interior designers of the '30s, Anthony joined Studio Andrée Putman, in 2010, where he was able to work with the best 'makers' in the world in shaping world-class interiors. In 2015, Anthony went to work for designer Christophe Delcourt, assisting him in designing his Delcourt Collection furniture, as well as contributing to Christophe's collaborations with brands such as Minotti, Collection Particulière, and CC-Tapis.
In 2020, Anthony Guerrée ventured out on his own and developed a unique signature. His first furniture collection was inspired by Marcel Proust's À la recherche du temps perdu. Each of the sculptural chairs embodies the character of one of the protagonists. These pieces tell a story, because each of Anthony's designs is more than simply functional. His designs are the tangible, flawless results of the dynamics between tradition and innovation.





SPECIFICATIONS

Body (seat/back): Wooden frame with polyurethane foam in varying density for optimum support and comfort, wrapped in hypoallergenic polyester fiber, 100% cotton inner cover.
Coupling system: The elements in any configuration are joined together with velcro strips
Base: Solid ash base.
Finish wood: Dark grey (with a pigmented oil).
Upholstery: Composition of fabrics depends on the customer's choice of upholstery. Leathers are either aniline or pigmented/ sealed.

OPTIONS

Upholstery: Fabric: removable body cover, available in all fabrics from the LINTELOO collection. Leather: removable scatter cushion covers, fixed body cover, available in all leathers from the LINTELOO collection. Customers can opt to supply their own choice of upholstery fabric/leather. Please note: leather upholstery requires more (visible) seams than fabric upholstery. For an impression of LINTELOO's fabrics and leathers, see 'Materials' at linteloo.com
Special features: Full set of fabric replacement covers available at 50% of the current retail price of the piece of furniture. Leather replacement covers on request. For optimum versatility, each seating element can also be placed in the room as a separate piece of furniture.



BLEND

MAINTENANCE

All LINTELOO furniture has been made with love and care. Of course, we want you to enjoy it, for as long as possible. Proper maintenance will prolong its lifespan, which is why each piece of LINTELOO furniture comes with a maintenance instruction booklet, also available for download at linteloo.com Detailed information on care and cleaning, including the recommended products, can also be found at linteloo-care.nl

Upholstery: Maintenance of the upholstery obviously depends on your choice of fabric or leather. As a rule of thumb, fabric upholstery—especially when removable—is easier to clean in case of spots and spills than leather. On the other hand, leather will handle regular wear and tear better, in a sense that the odd sign of use only adds to its character.
Cushions: Again, the level of maintenance depends on your choice of filling. Down/feather-filled cushions require regular plumping up and airing. But you may prefer the firmer seating experience and hypoallergenic qualities that a 100% polyester filling provides.
Legs: The occasional wipe-down with a damp cloth is all it takes.

WARRANTY

All LINTELOO sofas and chairs are backed by a 10-year warranty on the frame. Cushions, upholstery and all other LINTELOO products are backed by a 3-year warranty, with a depreciation of 1/3 each year. Please make sure you keep your invoice or receipt. Excluded from the warranty are:

- Regular wear and tear, damages and discolouration of upholstery (fabric and/or leather).
- Creasing, colour and structure variations and other irregularities, which are part of the natural characteristics of fabrics, leather and/or wood.
- Complaints regarding fabrics and/or leathers which are not part of the standard LINTELOO collection (specially supplied fabrics and/or leathers).
- Damages caused by improper use, inadequate or incorrect maintenance, or repairs carried out outside the scope of LINTELOO's responsibility. LINTELOO uses the Terms and Conditions of the Centrale Bond van Meubelfabrikanten, available at www.linteloo.com.

If you have any questions, please contact your LINTELOO dealer or LINTELOO's customer service department.



BLEND

DIMENSIONS

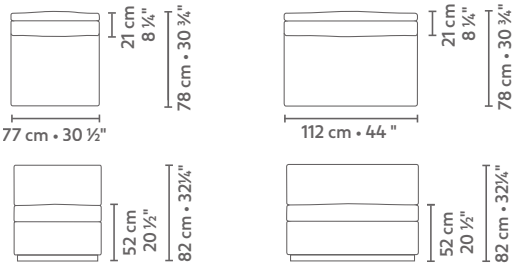

central element 75 x 78

central element 110 x 78

metrage (m)	5,28
	6,60

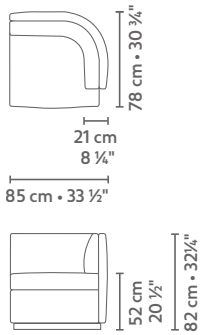

element arm L/R 83 x 78

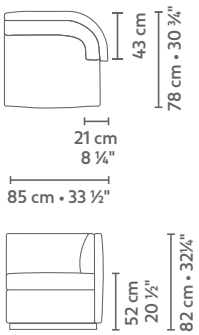

element ½ arm L/R 83 x 78

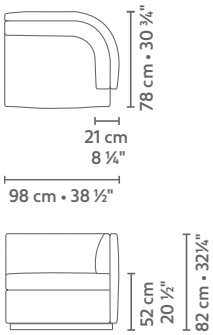

element arm L/R 95 x 78

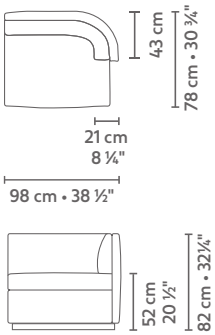

element ½ arm L/R 95 x 78

metrage (m)	5,50
	5,50
	5,50
	5,50

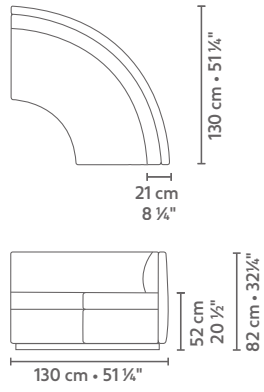

large corner 130 x 130

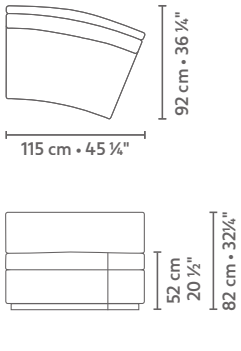

angled corner 115 x 92

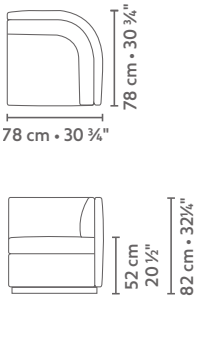

corner 78 x 78

metrage (m)	9,35
	7,50
	5,50

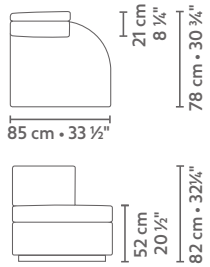

terminal element L/R 83 x 78

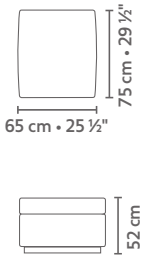

ottoman 65 x 75

metrage (m)	4,95
	3,30

BLEND

CONFIGURATION 1

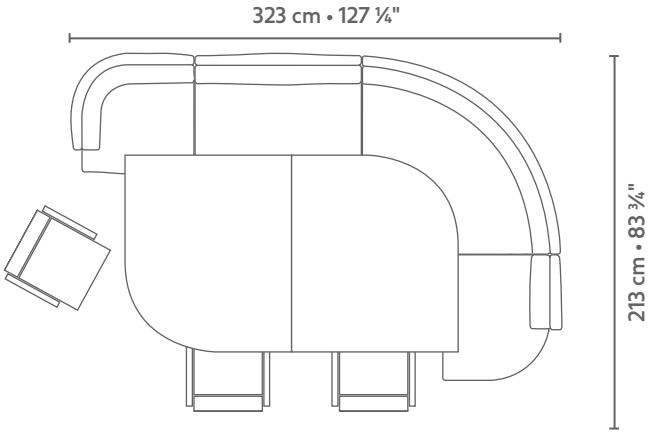

- element arm L 83 x 78
- central element 110 x 78
- large corner 130 x 130
- terminal element R 83 x 78
- Alter dining table
- Model D dining chairs

CONFIGURATION 2

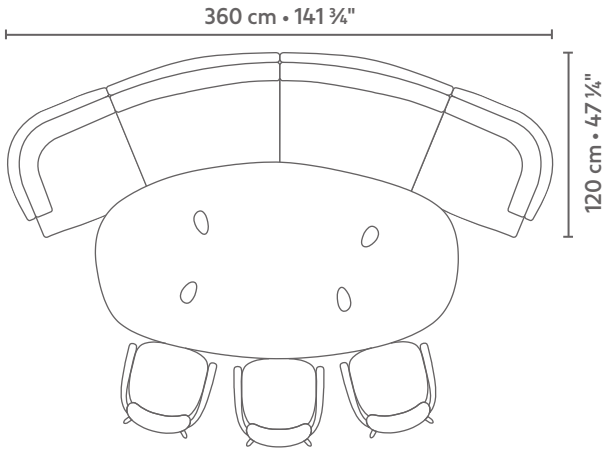

- element arm L 83 x 78
- angled corner 115 x 92
- angled corner 115 x 92
- element arm R 83 x 78
- Charles dining table
- Gentle dining chairs